Primer

DESPIECE TÉCNICO
TECHNICAL PARTS

Lavadoras
Washer extractors

MODELOS
LS-125 T

May 2016 Mayo

	MUEBLE / CABINET	LÁMINA / DRAWING	

ITEM	REFERENCIA REFERENCE	DENOMINACIÓN	DENOMINATION	LS-125 T							RECOMMENDED	ELIMINADO ELIMINATED	INTRODUCIDO INTRODUCED
1	12021520	COLUMNA ANTERIOR IZDA. 120	LEFT FRONT COLUMN 120	1									
2	12021521	COLUMNA ANTERIOR DCHA. 120	RIGHT FRONT COLUMN 120	1									
3	12023483	PARACHOQUES 55KG	BUMPER 55KG	1									
4	12021546	ZOCALO 120	SKIRTING 120	1									
5	12021519	PANEL LATERAL SUPERIOR 120	SIDE TOP PANEL 120	1									
6	12021526	ENCIMERA 120	WORKTOP 120	1									
7	12021510	COLUMNA POSTERIOR 120	REAR COLUMN 120	1									
8	12021581	PORTAMANDOS 120	CONTROL HOLDER 120	1									
9	12021617	PANEL POST. VALVULAS 120	VALVES REAR PANEL 120	1									
10	12021592	PANEL POST. INTERMEDIO 120	REAR MIDDLE PANEL 120	1									
11	12021616	PANEL VACIADO 120	DRAIN PANEL 120	1									
12	12021538	PANEL LATERAL INFERIOR 120	LOWER SIDE PANEL 120	4									
13	12010070	TOR. M8X20 ISO 7380 A2	SCREW M8X20 ISO 7380 A2	15									
15	12120238	SOPORTE SETA EMERGENCIA	EMERGENCY STOP SUPPORT	1							X		
16	12120237	PULSAD. 250V AC 16A 1VIA 2POS UL	250V AC 16A 1WAY 2POS UL SWITCH	1							X		
17	12120235	SETA DE EMERGENCIA	EMERGENCY STOP BUTTON	1							X		
18	12115336	ADHESIVO COLUMNAS TP PRIMER	COLUMN ADHESIVE TP PRIMER	1							X		
19	12120561	CHAPA VISUALIZADOR TP COMPL.	COMPLETE DISPLAY TP SHEET	1									
20	12119488	DISPLAY TP	DISPLAY TP	1							X		
21	12120404	TARJETA DISPLAY TFT	TFT DISPLAY CARD	1							X		
22	12116871	CABLEADO LATIGUILLO USB	USB WIRE	1									
23	12119993	CABLE DVI-D (Dual Link) (M-M, 2M)	DVI-D WIRE (Dual Link) (M-M, 2M)	1									
24	12119954	TAPON USB	USB CAP	1									
25	12023335	VALVULA 4" IZQUIERDA	4" LEFT VALVE	1							X		

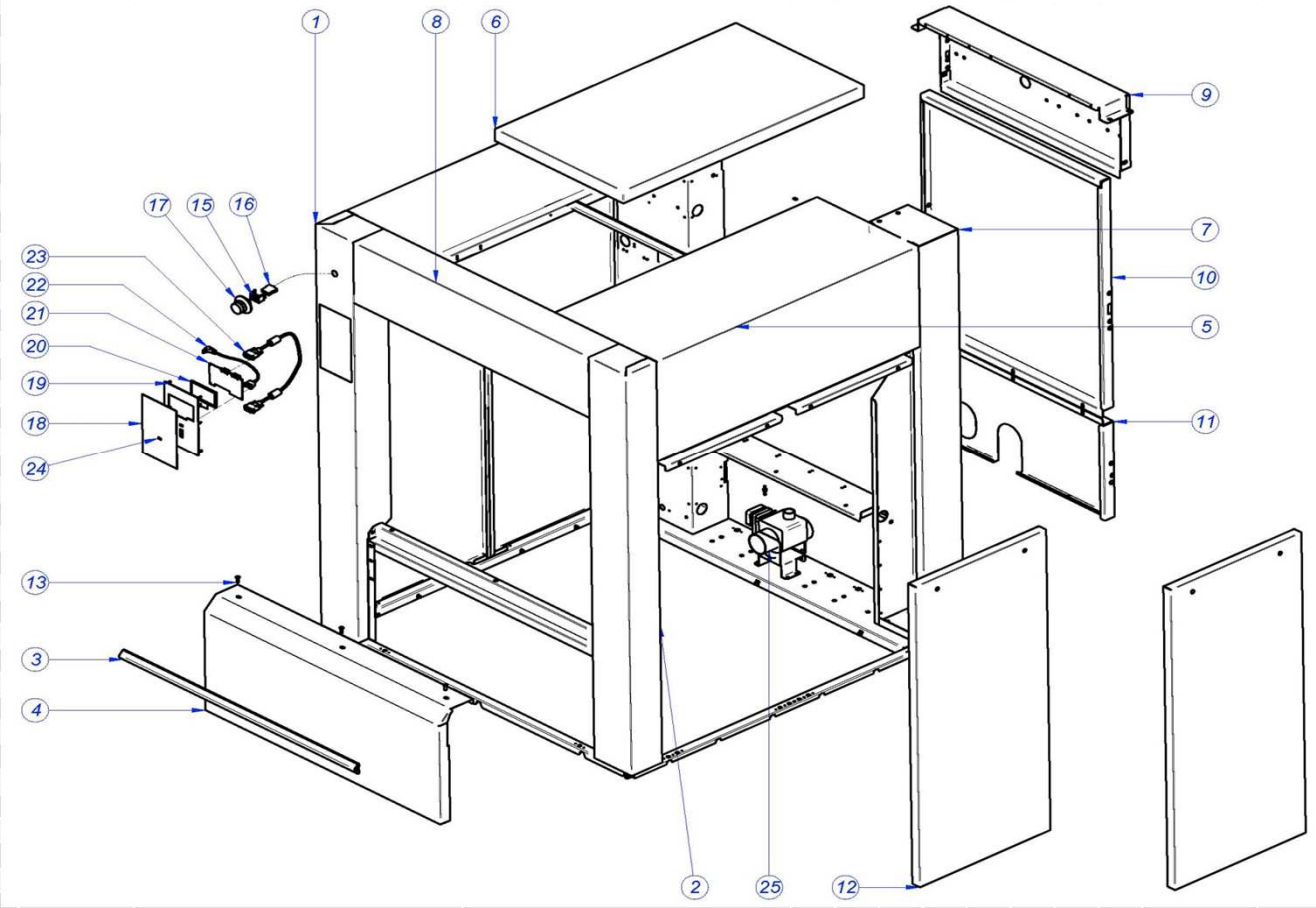

	PUERTA / DOOR	LÁMINA / DRAWING	

ITEM	REFERENCIA REFERENCE	DENOMINACIÓN	DENOMINATION	LS-125 T							RECOMMENDED	ELIMINADO ELIMINATED	INTRODUCIDO INTRODUCED
1	12038661	PUERTA COMPL. LS-125 SUB	COMPL. DOOR LS-125 SUB	1									
2	12025085	VARILLA ROSCADA PUERTA 120	DOOR THREADED ROD 120	6									
3	12010111	TUERCA EXAGONAL M10 INOX.	HEXAGONAL NUT M10 INOX.	12									
4	12038943	PUERTA PISADOR COMPLETO	COMPL. DOOR HOLD-DOWN	1									
5	12045077	PISADOR JUNTA PUERTA 120	HOLD-DOWN DOOR SEAL 120	1									
6	12023276	JUNTA CRISTAL 120	GLASS SEAL 120	1									
7	12023228	CRISTAL PUERTA 120	GLASS DOOR 120	1									
8	12010143	TUER.SOMB.M6	CAP NUT M6	10									
9	12025100	CASQUILLO "SELFOIL 16-22-25	SELFOIL BUSHING 16-22-25	4									
10	12023312	EJE BISAGRA	HINGE SHAFT	2									
11	12023421	BISAGRA PUERTA (2)	DOOR HINGE (2)	2									
12	12010077	ARAND 27X12,5X2,5HIER	WASHER 27X12,5X2,5HIER	4									
13	12010069	TOR.EX.M12X40 H.ZINCADO	HEX.SCREW.M12X40 H.ZINC	4									
14	12023072	CALZO BISAGRA 60,40	HINGE WEDGE 60,40	8									
15	12024978	CASQUILLO SELFOIL DE VALONA	VALONA SELFOIL BUSHING	1									
16	12023226	EJE PUERTA 40/60	DOOR SHAFT 40/60	1									
17	12010264	VARILL. ROSC. EXTR. CON. M6X	THREAD. ROD CON. END M6X	1									
18	12009934	ARAND. SEG. A24 DIN6799 INOX	SAFETY WASHER A24 DIN6799 INOX	1									
19	12024968	EJE LEVA PUERTA 60/40	DOOR CAM SHAFT 40/60	1									
20	12009957	TUER.EXA.M16	HEX NUT M16	1									
21	12025162	CASQUILLO ENGANCHE	HOOK BUSHING	1									
22	12023355	SUPLEMENTO EJE LEVA 40/60	SUPLEMENT CAM SHAFT 40/60	1									
24	12024829	MANGO PUERTA PRIMER	DOOR HANDLE PRIMER	1									
25	12023078	SOPORTE GOMA 120	RUBBER SUPPORT 120	6									
26	12023436	JUNTA PUERTA 120	DOOR SEAL 120	1									
27	12010251	TUER.AUTOB.M6	SELF-LOCK.NUT.M6	6									
28	12021951	SEPARADOR CRISTAL	GLASS SEPARATOR	8									
29	12023119	PISADOR CRISTAL	GLASS HOLD-DOWN	8									

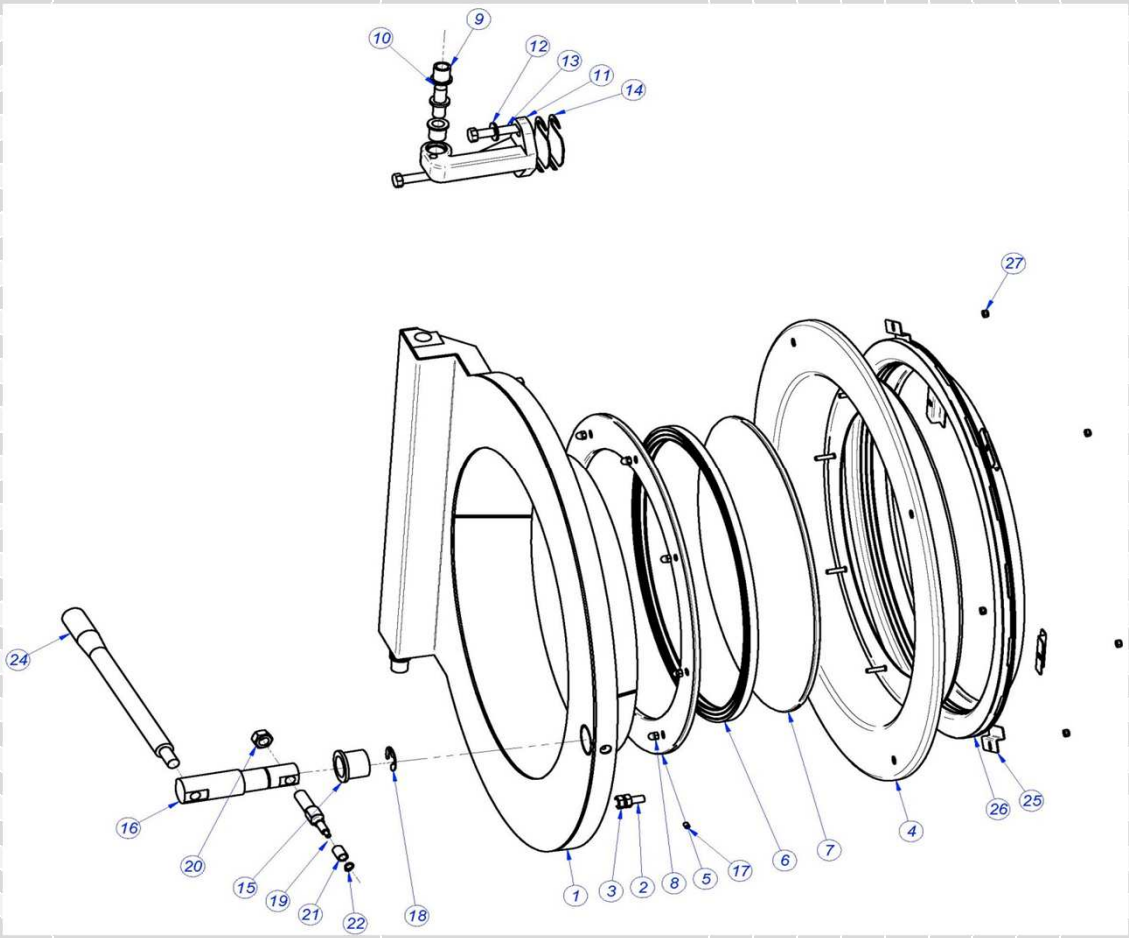

	CIERRE / LOCK	LÁMINA / DRAWING	

ITEM	REFERENCIA REFERENCE	DENOMINACIÓN	DENOMINATION	LS-125 T							RECOMMENDED	ELIMINADO ELIMINATED	INTRODUCIDO INTRODUCED
1	12009944	ARANDELA A5	WASHER A5	4									
2	12001575	PROTECTOR CONEX CIERRE 120	CLOSURE CONNECTIO. GUARD	1									
3	12023383	MUELLE CIERRE	LOCK SPRING	1									
4	12023211	ELECTROIMAN PUERTA	DOOR ELECTROMAGNET	1							X		
5	12010247	TORN.ALOM.M3X20	CURVED SCREW.M3X20	4									
6	12009882	ARAND.ABAN. A6 A.304	WASHER A6 A.304	4									
7	12023384	EJE BLOQUEO 40,60,120	LOCKING SHAFT 40,60,120	1									
8	12009840	ARAND.ABAN. A8 A.304	FAN WASHER A8 A.304	4									
9	12010148	TORN.AMAR.M6X13 A304	FASTENING SCREW M6X13 A304	2									
10	12024868	LEBA CIERRE 40,60,120	LEBA CLOSURE 40,60,120	1									
11	12010177	TORN.EXA. M6X30 A.304	HEX BOLT M6X30 A.304	2									
12	12007779	BASE CIERRE 40,60,120	CLOSURE BASE 40,60,120	1									
13	12010097	TORN.EXA. M8X30	HEX BOLT M8X30	4									
14	12010186	TORN.EXA. M6X15	HEX BOLT M6X15	2									
15	12025182	DESBLOQUEO	UNLOCK	1									
16	12010216	TORN. ALLEN M2.5x5	BOLT, ALLEN M2.5x5	2									
17	12010268	ARANDELA A8	WASHER A8	4									
18	12138167 = 12	BLOQUEO CIERRE 40,60,120	CLOSURE LOCK 40,60,120	1							X		
19	12021713	TAPA CIERRE 120	LOCK COVER 120	1									
20	12025218	INTERRUPTOR PUERTA PLANO	FLAT DOOR SWITCH	2							X		
21	12001286	SOPORTE CIERRE 120	CLOSURE SUPPORT 120	1									

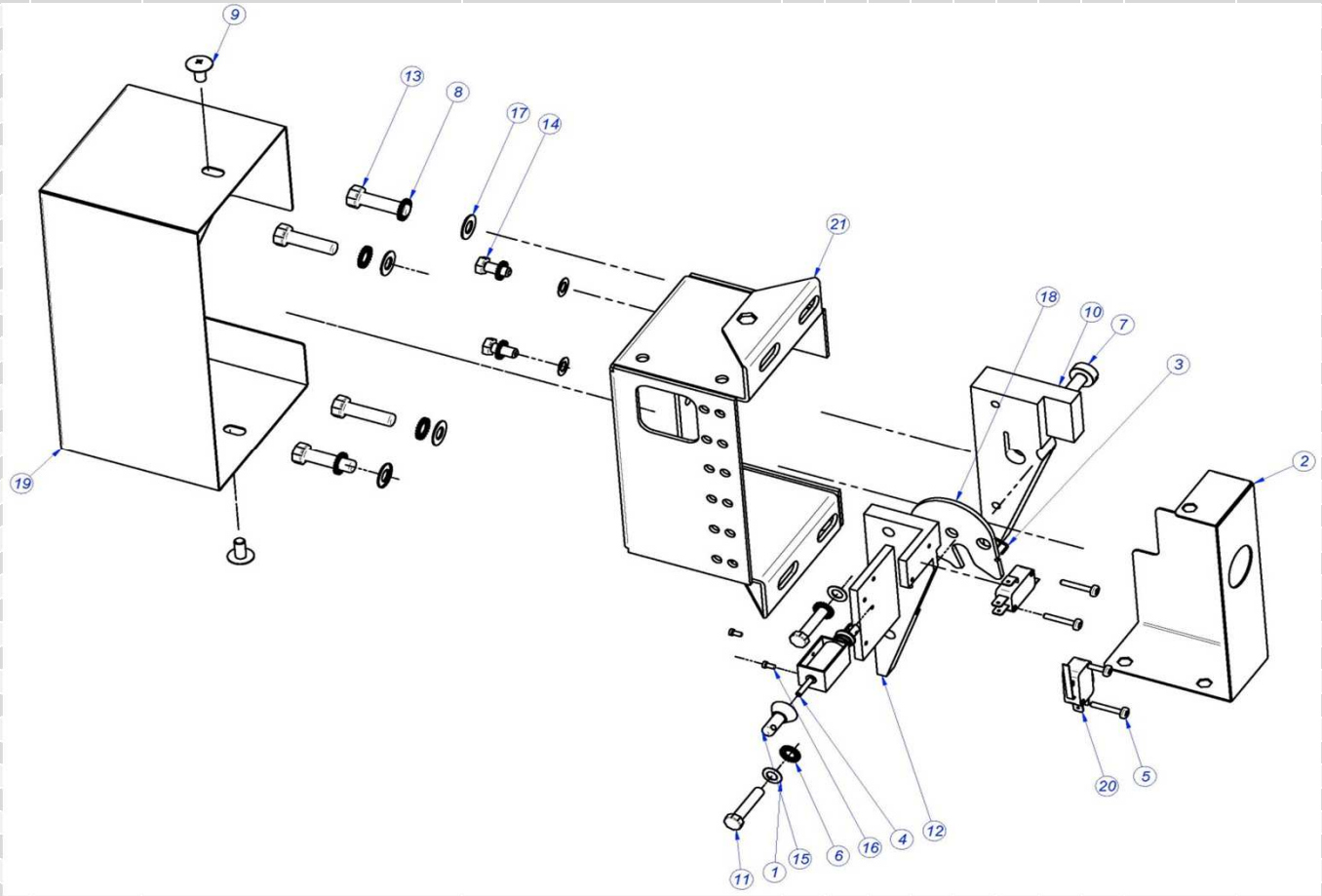

	ARMAZON / FRAME	LÁMINA / DRAWING	

ITEM	REFERENCIA REFERENCE	DENOMINACIÓN	DENOMINATION	LS-125 T							RECOMMENDED	ELIMINADO ELIMINATED	INTRODUCIDO INTRODUCED
1	12023275	ARMAZON 120	FRAME 120	1									
2	12023257	PATA RIGIDA 60	RIGID LEG	4									
4	12010182	TUE.EX.AUT.M10 8.8 ZIN	HEX. SCREW. AUT. M10 8.8 ZIN	10									
5	12009849	TORNILLO EXAG.M.20x110	HEXAGONAL SCREW M.20x110	4									
6	12009952	TUERCA EXAG.AUTOBL.M.20	HEX.SCREW.AUT.M20	10									
7	12024865	ANCLAJE 120	ANCHORAGE 60	3									
8	12009861	TORNILLO EXAG.M.20x80	HEXAGONAL SCREW M.20x80	2									
9	12023467	CASQUILLO AMORTIGUADORES	SHOCK ABSORBER BUSHING	32									
10	12010125	ARANDELA A21	WASHER A21	20									
11	12025004	PASADOR MUELLE 120	SPRING SAFETY 120	6									
12	12010137	PASADOR DE ALETAS 3 X 50	FIN SAFETY 3 X 50	12									
13	12049230	AMORTIGUADOR LF-120	SHOCK ABSORB. LF-120	8							X		
14	12025076	AMORTIGUADOR 250N SUSPA	SHOCK ABSORB. 250N SUSPA	8							X		
15	12009991	TORN.EXAG.M10X110	HEXAGONAL SCREW M.10x110	6									
16	12010235	ARANDELA A10	WASHER A10	19									
17	12009921	EXAG. M10X150(8.8) DIN931	HEXAG. M10X150(8.8) DIN931	2									
18	12023114	SOP. MICRO DESEQUILIBRIO 120	UNBALANCE MICRO SUPPORT. V2	1									
19	12024588	FINAL DE CARRERA VARILLA	FIN DE CARRERA DIPSTICK	1									
20	12023063	RANURA MICRO DESEQUILIBRIO	UNBALANCE MICRO HOLE	1									

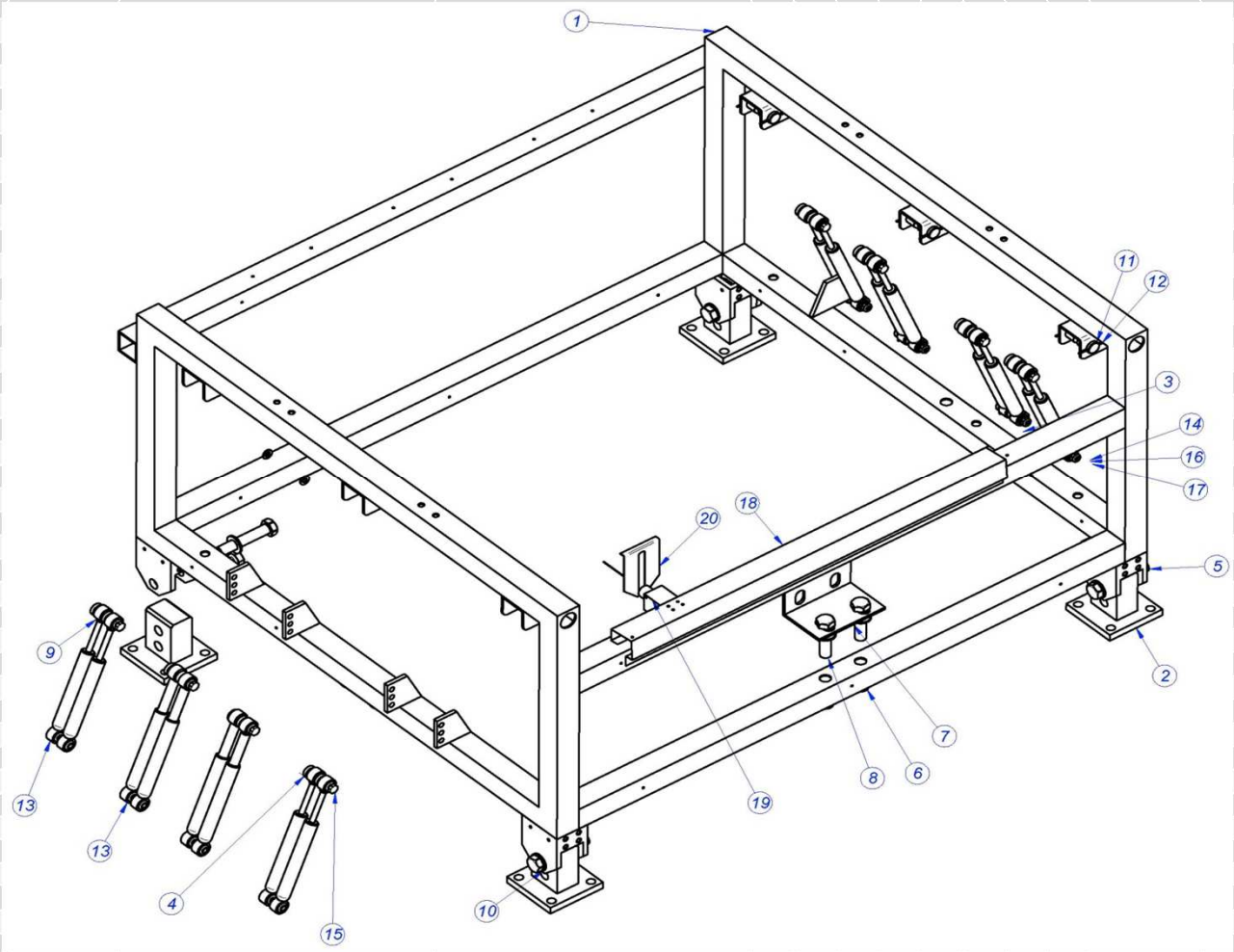

	CUNA / CRADLE	LÁMINA / DRAWING	

ITEM	REFERENCIA REFERENCE	DENOMINACIÓN	DENOMINATION	LS-125 T							RECOMMENDED	ELIMINADO ELIMINATED	INTRODUCIDO INTRODUCED
1	12023258	CUNA COMPLETA 120	COMPLETE CRADLE 120	1									
2	12023186	CONTRAPESO MOTOR 120	MOTOR COUNTERWEIGHT 120	1									
3	12009832	TORN.EXA. M16x130	HEX. SCREW M16x130	4									
4	12010102	ARANDELA A16 DIN 125	WASHER A16 DIN 125	12									
5	12010061	TUERCA EXAG.AUTOBL.M.16	HEX. BOLT.AUTOBL.M.16	6									
6	12010061	TOR.EX.M12X35 H.ZINCADO	HEX. SCREW M12X35 H.ZINCADO	3									
7	12009917	TORN. EXAG.M.16X80 DIN 933	HEX SCREW M.16X80 DIN 933	2									
8	12025004	PASADOR MUELLE 120	SPRING PIN 120	6									
9	12010144	TUE.EX.AUT.M12 H.ZINCADA	HEX. BOLT AUT.M12 H.ZINCADA	22									
10	12010137	PASADOR DE ALETAS 3 X 50	COTTER PIN 3 X 50	24									
11	12023362	MUELLE LF-120	SRING LF-120	6									
12	12024891	CORREA SPB 120	BELT SPB 3000	4							X		
13	12023368	PLACA SOPORTE MOTOR 120	MOTOR SUPPORT PLATE120	1									
14	12023471	PLETINA MOTOR 120	MOTOR PLATEN 120	2									
15	12023231	MOTOR 15KW	MOTOR 15KW	1							X		
16	12024861	POLEA MOTOR SPB/B 140-4	MOTOR PULLEY SPB/B 140-4	1									
17	12023392	CINTA LARGA SOPORTE CUBA120	TUB SUPPORT LONG TAPE 120	2									
18	12023405	CINTA CORTA SOPORT. CUBA 120	TUB SUPPO. SHORT TAPE120	2									
19	12009992	TORNILLO EXAGONAL M10X80	HEX SCREW M10X80	1									
21	12025056	TAPER BUSH MOTOR 2012-42	TAPER BUSH MOTOR 2012-42	1									
22	12010069	TOR.EX.M12X40 H.ZINCADO	HEX. SCREW M12X40 H.ZINCADO	16									
23	12010125	ARANDELA A21	WASHER A21	4									
24	12009849	TORNILLO EXAG.M.20x110	HEX. SCREW M.20x110	2									
25	12009952	TUERCA EXAG.AUTOBL.M.20	HEX. BOLT AUTOBL.M.20	2									
26	12009955	TOR. AVELLANADO M12x40	COUNTERSU. SCREW M12x40	6									
27	12101476	VENTIL. + SOP. MOTOR 120	FAN + FAN SUPP. 120 MOTOR	1							X		
S/Nº	12095624	VENTILADOR 230V AC	FAN 230V AC	1									
S/Nº	12095627	SOPORTE VENTILADOR	FAN SUPPORT	1									

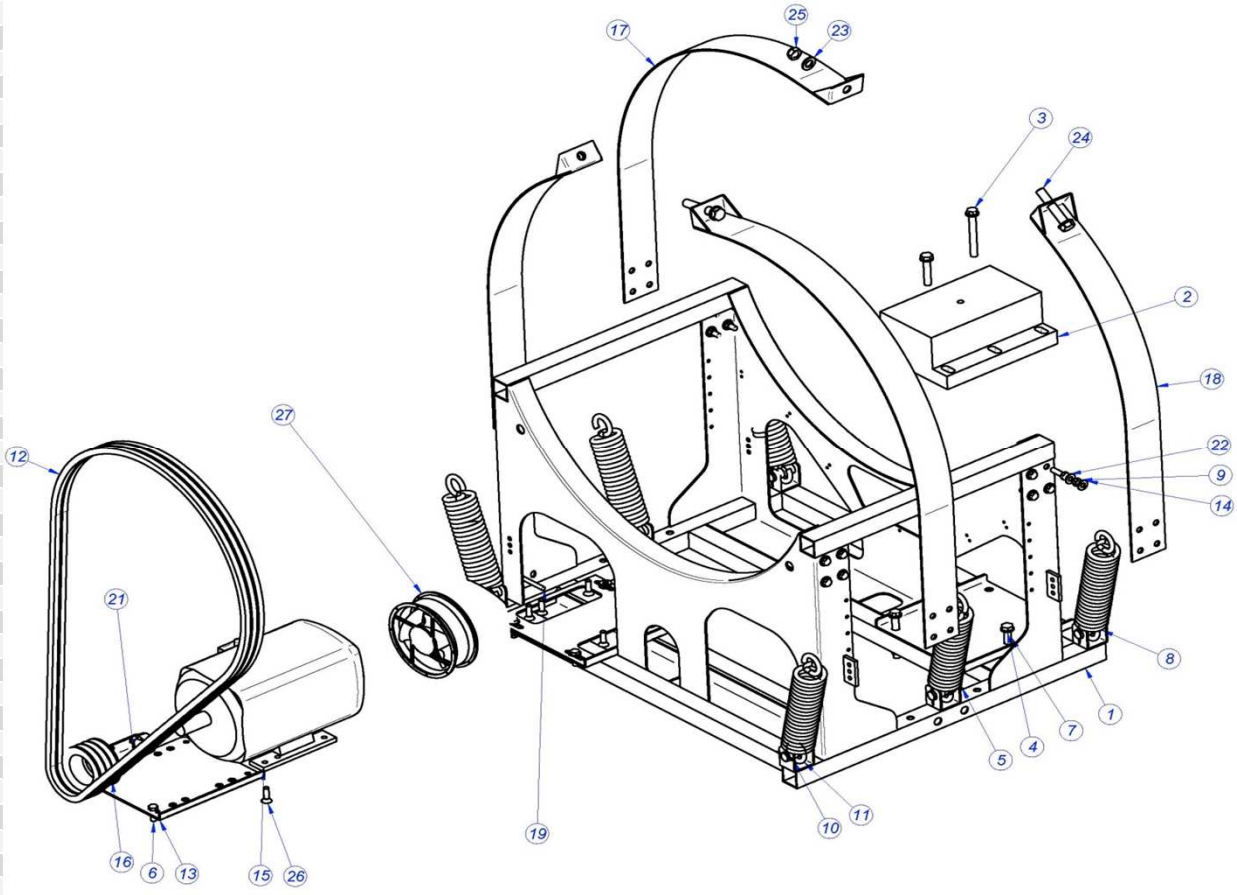

	CUBETERA / TRAY	LÁMINA / DRAWING	

ITEM	REFERENCIA REFERENCE	DENOMINACIÓN	DENOMINATION	LS-125 T							RECOMMENDED	ELIMINADO ELIMINATED	INTRODUCIDO INTRODUCED
1	12010144	CUBA COMPLETA 120	COMPLETE TUB 120	1									
2	12023240	CONTRAPESO ANTERIOR 120	FRONT COUNTERWEIGHT 120	1									
3	12000195	FRENTE CUBA 120 COMPL.	COMPLETE TUB FRONT 120	1									
4	12010268	ARANDELA A8	WASHER A8	6									
5	12009840	ARAND.ABAN. A8 A.304	SPEC. WASHER A8 A.304	12									
6	12010056	TOR.EX.M8X40	HEX. SCREW M8X40	6									
7	12023363	ANILLO CUBA 120 COMPL.	COMPLETE TUB RING 120	4									
8	12010061	TUERCA EXAG.AUTOBL.M.16	HEX. BOLT AUTOBL. M16	50									
9	12009918	TORNILLO EXAG.M.16X70	HEX. SCREW M16X70	67									
10	12023403	GANCHO CUBA 120	TUB HOOK 120	2									
11	12023180	SOPORTE FONDO CUBA 120	TUB BASE SUPPORT120	1									
12	**12092890**	**KIT SOPORTE RODAMIENTOS 120**	**KIT BEARING SUPPORT 120**	**1**							X		
12	12093641	SOPORTE RODAMIENTOS 120	BEARING SUPPORT 120	1									
13	12021480	RODAMIENTO 140/300/62	BEARING 140/300/62	1									
14	12021485	ROD. 120 A ROTULA CON MANGUI	BEARING 120 A ROTULA	1									
15	12021799	TAPA SOP. RODAMIENTOS 120	BEARING COVERS 120	1									
16	12009712	JUNTA TAPA RODAMIENTOS 120	BEARING COVERS SEAL 120	1									
17	12009890	ARAND.ABAN. A5 A.304	SPEC. WASHER A5 A.304	4									
18	12010238	TORN.EXA. M5X10 A.304	HEX SCREW M5X10 A.304	4									
19	12024965	ANILLO SEGURIDAD 180 DIN 472	SECURITY RING 180 DIN 472	1									
20	12023277	CASQUILLO RETENES 120	RETAINER CAP 120	1									
21	12009778	RACOR RAPIDO 1/4 - 6	QUICK CONNECTOR 1 / 4 - 6	1									
22	12010050	TORN. EXAG. M8X50 AISI 304	HEX. SCREW M8X50 AISI 304	5									
23	12021503	PANEL FRONTAL 120	FRONT PANEL 120	1									
24	12023395	RETEN RADIAL BAUMX7 VITON	RETAINER BAUMX7 VITON	2									
25	12024908	JUNTA TORICA 315 X 6	O-RING Ø 315 X 6	1									
26	12024976	JUNTA TORICA 224 X 6	O-RING Ø 224 X 6	1									
27	12091101	ARANDELA SEG. TORN. SOP. 120	SECURITY WASHER SUP. 120	24									
28	12004137	FONDO CUBA 120 COMPL.	COMPLETE TUB BASE 120	1									
29	12009918	TORN.EXA. M16X70MM DIN933	HEX. SCREW M16X70MM DIN933	24									
30	12009865	TORN.EXA. M16X150MM DIN931	HEX. SCREW M16X150MM DIN931	2									
31	12023393	ENGRASADOR SOP. ROD.	BEARING SUPPORT NIPPLE	1									
32	12128218	TAPON CUBA 1" G	TUB CAP 1" G	1									
33	12025065	CASQUILLO POSICION CUBA 60	POSITION BUSHING TUB 60	2									
34	11000420	JUNTA CUBA 18	TUB JOINT 18	3							X		
35	11000159	PERFIL JUNTA CUBA 120/60/40	TUB JOINT PROFIL 60	10									
36	12025036	SONDA 64KOHMIO NTC	64KOHM NTC PROBE	1									
37	12096597	TERM_SEG_261B_110ºC_FAST_90	SAFETY THER. 261B_110ºC_FAST_90	1							X		
S/N	11000163	TUBO NEUM.4x2.5	PNEUMATIC TUBE 4X2.5	5									
S/N	11000112	TUBO NEUM.6X4	PNEUMATIC TUBE 6X4	2									

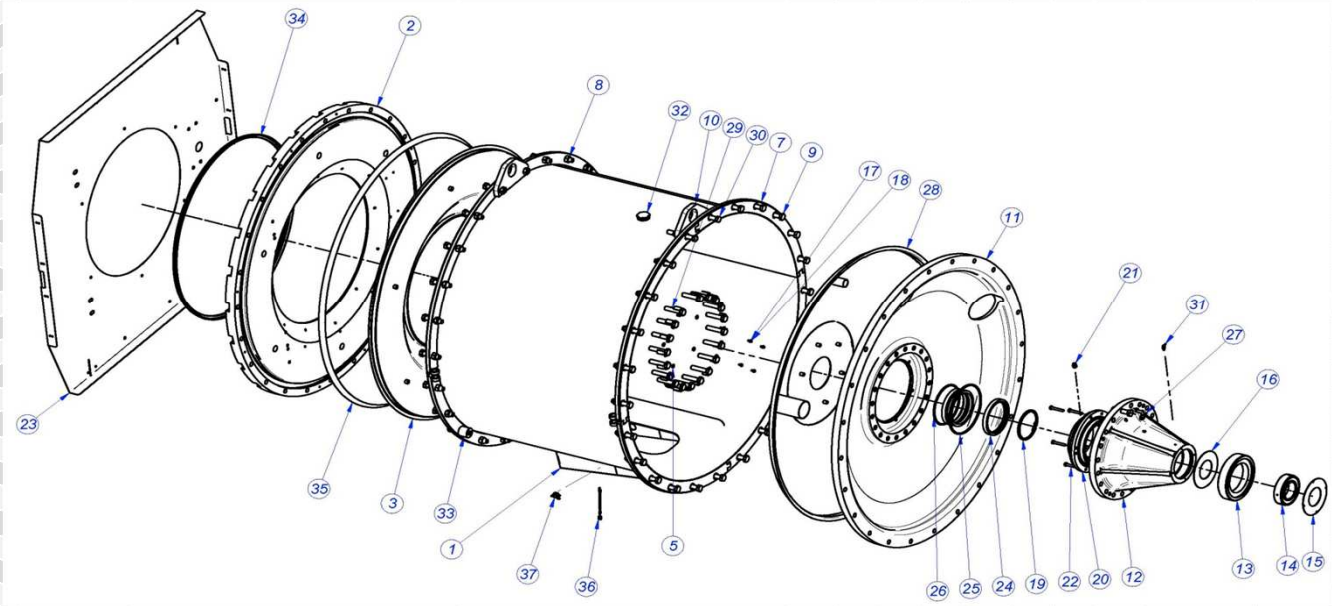

	TAMBOR / DRUM	LÁMINA / DRAWING	

ITEM	REFERENCIA REFERENCE	DENOMINACIÓN	DENOMINATION	LS-125 T							RECOMMENDED	ELIMINADO ELIMINATED	INTRODUCIDO INTRODUCED
1	12004157	TAMBOR 120 COMPLETO	DRUM 120 COMPLETE	1									
2	12023316	GUIA RODAMIENTO 120	BEARING GUIDE 120	1									
3	12009968	JUNTA TORICA Ø INT 105X5	O-RING SEAL Ø INT. 105X5	1									
4	12025197	ANILLO SEGURIDAD 105 DIN 471	SAFETY RING 105 DIN 471	1									
5	12021480	RODAMIENTO 140/300/62	BEARING 140/300/62	1									
6	12023192	POLEA TAMBOR 120	DRUM PULLEY 120	1									
7	12024993	RETEN V-RING VA 100	RETAINER V-RING VA-100	1									
8	12023210	BUJE DE FIJACION 120	PULLEY TAPER BUSH 120	1									
9	12025268	ANILLO SEGURIDAD 65	SAFETY RING 65	1									
10	12007793	CASQUILLO EJE 120	AXIS BUSHING 120	1									
11	12007916	JUNTA TORICA Ø INT 140 X 5	O-RING SEAL Ø INT. 140 X 5	1									

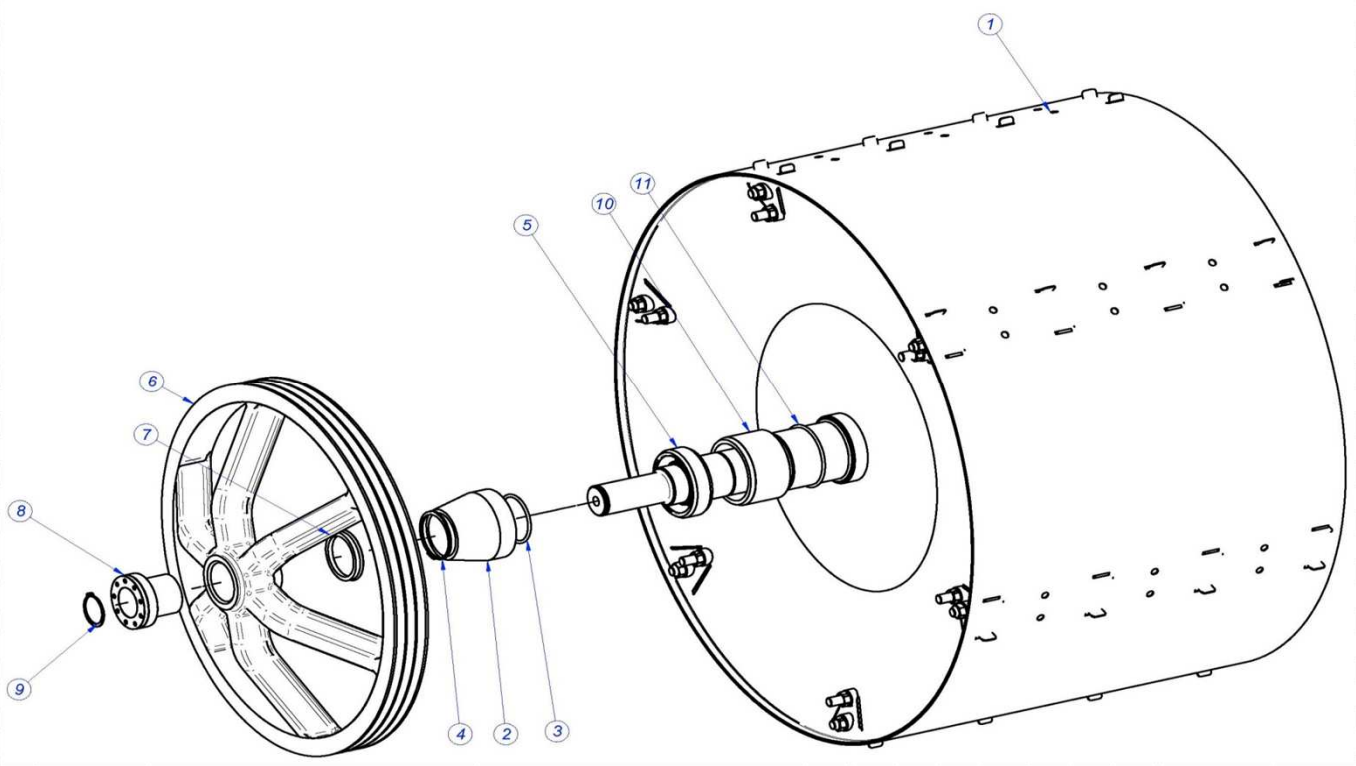

	CONJUNTO DESAGÜE / DRAINAGE SET	LÁMINA / DRAWING	

ITEM	REFERENCIA REFERENCE	DENOMINACIÓN	DENOMINATION	LS-125 T							RECOMMENDED	ELIMINADO ELIMINATED	INTRODUCIDO INTRODUCED
1	12021555	T 4" 120	T 4" 120	1									
3	12023335	VALVULA 4" IZQUIERDA	LEFT VALVE 4 "	1									
4	12021591	SALIDA DESAGUE 120	DRAINAGE OUTLET	1									
5	12003476	TAPA DESAGUE 120 COMPLETO	DRAINAGE COVER 120 COMPL.	1									
6	12025110	JUNTA TORICA 2-434 142.24x7	O-RING SEAL 2-434 142.24x7	1									
7	12009682	EMPALME 4"	CONNECTION 4"	2									
8	12023346	FUELLE TUBO VACIADO 120	EMPTYING BELLOWS PIPE	1									
9	12047653	CAÑA INOX. DESAGÜE 120	CANE INOX. DRAIN 120	1									
10	12047661	ABRAZADERA REFOR. M8 115 ZINC.	REFOR. CLAMP M8 115 ZINC.	1									
11	12025017	CONDUCTO DOSIFICADOR CUBA	TUB DISPENSER PIPE	1									
12	12024592	CODO INOXIDABLE Ø73*70	INOXID. ELBOW Ø73*70	1									
13	12023628	CONDUCTO VACIADO LC-LF 25	EMPTYING PIPE LC-LF 25	1									
14	12025098	JUNTA CASQ. RETENES 10,13 V2	SEAL RETAINER CAP 10,13 V2	1									
15	12047672	ABRAZADERA S 110-130 DIN 3017	CLAMP S 110-130 DIN 3017	6									
	19004748	KIT DOBLE DESAGÜE 120	DOUBLE DRAINING KIT 120										

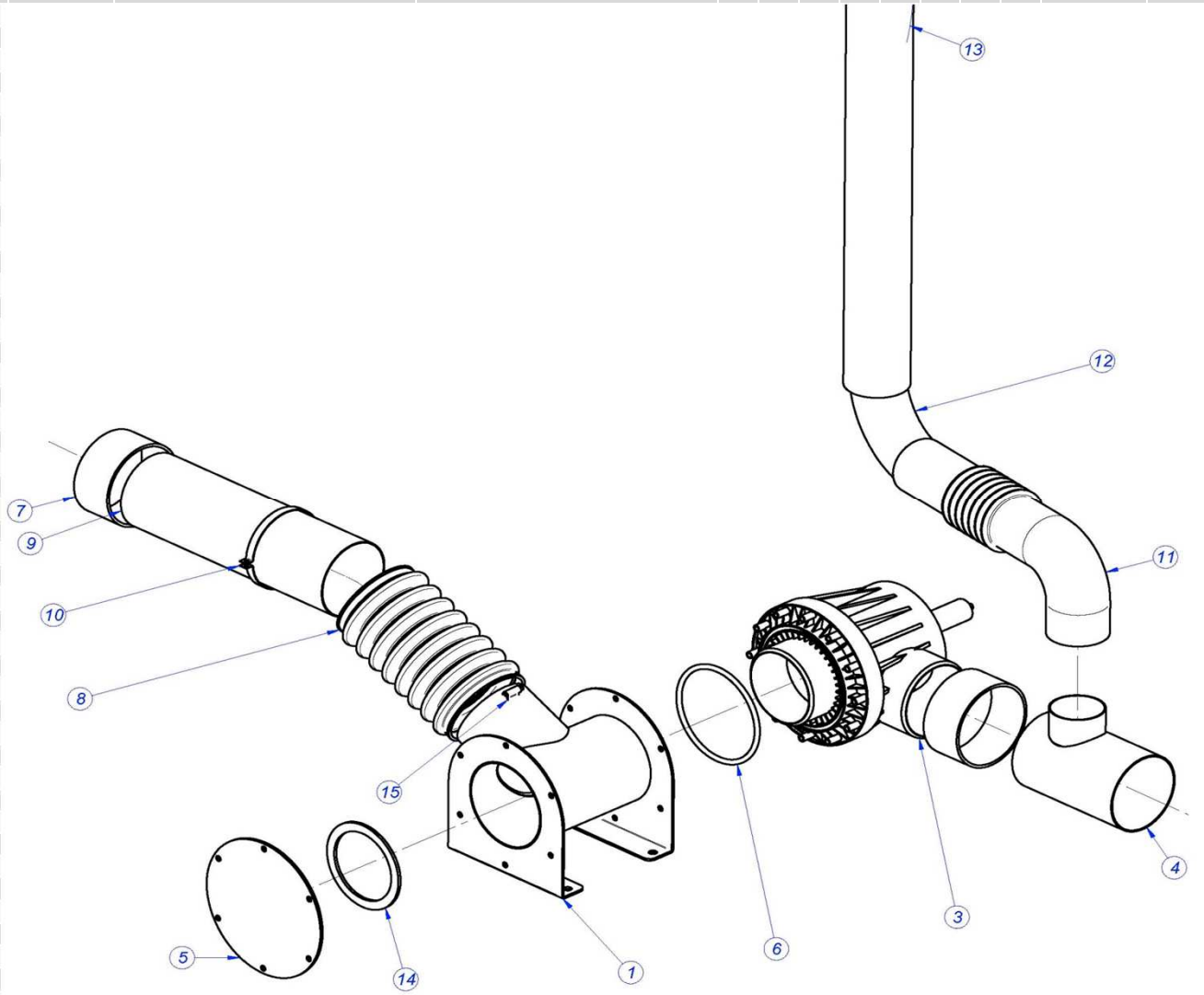

	SOPORTE E.V. / SOLENOID VALVE SUPPORT	LÁMINA / DRAWING	

ITEM	REFERENCIA REFERENCE	DENOMINACIÓN	DENOMINATION	LS-125 T AC	LS-125 T S						RECOMMENDED	ELIMINADO ELIMINATED	INTRODUCIDO INTRODUCED
1	12021617	PANEL POST. VALVULAS 120	REAR PANEL VALVES 120	1	1								
2	12023339	VALVULA VAPOR 1 1/4"	STEAM VALVE 1 1/4"	_	1								
3	12025000	GM 2020 UNION GAS 11/4" 11/4	UNION GAS GM 2020 11/4" 11/4	_	1								
4	12023336	VALVULA NEUMATICA 1" 1/2	PNEUMATIC VALVE 1" 1/2	3	3								
S/Nº	12009781	CODO 1/8" Ø 4	ELBOW 1/8" Ø 4	4	4								
5	12024929	RACOR-MANGUERA 1"1/2	CONNECTION-HOSE 1"1/2	3	3								
6	12021866	SOPORTE VALVULA 1 1/2	VALVE SUPPORT 1 1/2	3	3								
7	12024952	GM 2020 UNION GAS 11/2" 11/2	UNION GAS GM 2020 11/2" 11/2	3	3								
8	12021865	SOPORTE VALVULA 1 1/4	VALVE SUPPORT 3/4 1 1/4	_	1								
9	12021541	TUBO ENTRADAS DE AGUA 1 1/2	WATER INTAKE PIPE 1 1/2	1	1								
10	12023245	CONDUCTO DESAGUE 8	DRAINAGE PIPE 8	1	1								
11	12021548	EMPALME DOSIFICADOR 120	DOSING CONNECTION 120	1	1								
11A	12024507	TAPON DOSIFICADOR	DOSING CAP	7	7								
12	12023297	MANGUITO 1 1/4"	HOSE 1 1/4"	_	2								
13	12023184	LATIGUILLO VAPOR 120	STEAM LINE 120	_	1								
14	12021528	INYECTOR VAPOR 120	STEAM INJECTOR 120	_	1								
15	12007746	CONDUCTO DOSIFICA. CUBA 40-60	TUB DISPENSER PIPE 40-60	1	1								
16	12025009	ARANDELA TEFLON 38X30X4	WASHER TEFLON 38X30X4	2	4								
17	12007766	CONDUCTO SALIDA VAPOR	STEAM OUTLET PIPE	1	1								

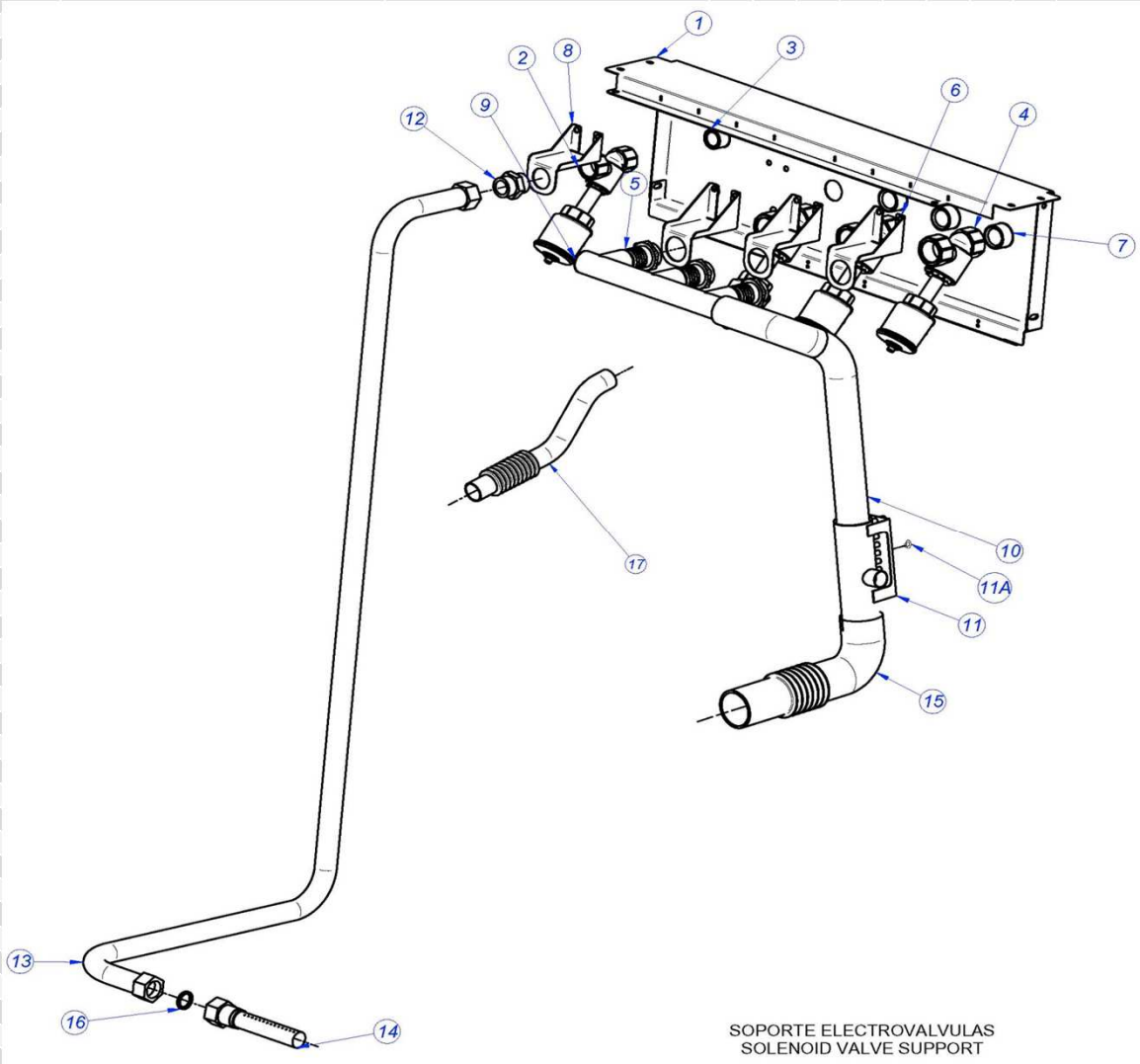

	SOPORTE E.V. / SOLENOID VALVE SUPPORT	LÁMINA / DRAWING	

ITEM	REFERENCIA REFERENCE	DENOMINACIÓN	DENOMINATION	LS-125 T							RECOMMENDED	ELIMINADO ELIMINATED	INTRODUCIDO INTRODUCED
1	12023222	CUBETERA LF-55	TRAY LF-55	1									
2	12023324	CUBETA DETERGENTES LF-55	DETERGENT TRAY LF-55	2									
3	12023326	CUBETA LIQUIDOS LF-55	LIQUID TRAY LF-55	3									
4	12023701	TUBO SIFON	SIPHON PIPE	3									
5	12022260	PASAMUROS COMPLETO	COMPLETE BUSHING	5									
6	12010159	JUNTA DE GOMA 3031986	RUBBER SEAL 3031986	5									
7	12009864	TUERCA 16X1,5	NUT 16X1.5	5									
8	12025092	EJE CIERRE CUBETERA	TRAY CLOSURE SHAFT	1									
9	12025095	CASQUILLO SEPARADOR CIERRE	CLOSURE SEPARATOR BUSHING	1									
10	12024461	MANGO CUBETERA	TRAY HANDLE	1									
11	12010187	MANGUITO SUJ.3X12 DIN1481	HOSE FAST. 3X12 DIN1481	1									
12	12009944	ARANDELA A5	WASHER A5	11									
13	12010251	TUER.AUTOB.M6	SELF-LOCK.NUT.M6	11									
14	12003705	PUERTA CUBETERA COMPLETA	COMPLETE TRAY DOOR	1									
14A	12009675	JUNTA PUERTA CUBETERA	TRAY DOOR SEAL	1									
15	12023589	TOPE CRISTAL INTERIOR	INTERIOR GLASS BUFFER	2									
16	12003380	BISAGRA CUBETERA IZDA. COMPL	LEFT TRAY HINGE COMPL.	1									
17	12003369	BISAGRA CUBETERA DCHA. COMPL	RIGHT TRAY HINGE COMPL.	1									
18	12010267	ARANDELA 16X6X1.2 A.304	WASHER 16X6X1.2 A.304	4									
19	12009890	ARANDELA ABANICO A5 A.304	WASHER A5 A.304	4									
20	12010221	TORN.EXA. M5X15 A.304	HEX BOLT M5X15 A.304	4									
21	12009914	ABRAZADERA 70-90	CLAMP 70-90	2									
22	12007746	CONDUCTO DOSIFICADOR CUBA	FILLER PIPE LC-LF 25	2									

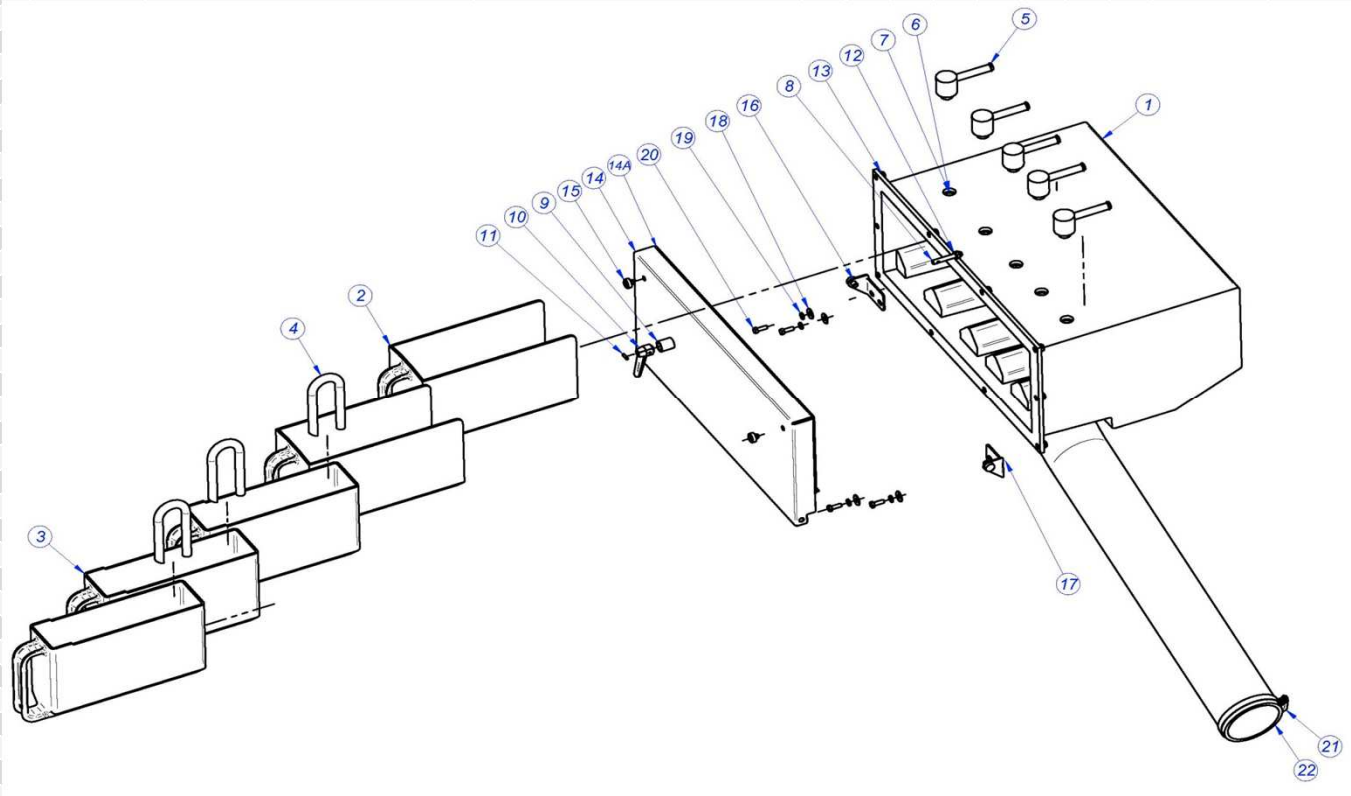

	CUADRO ELECTRICO / ELECTRICAL BOARD	LÁMINA / DRAWING	

ITEM	REFERENCIA REFERENCE	DENOMINACIÓN	DENOMINATION	LS-125 T							RECOMMENDED	ELIMINADO ELIMINATED	INTRODUCIDO INTRODUCED
1	12001047	PUERTA CUADRO 120 V2	DOOR ELECTRIC 120 V2	1									
2	12116834	SOPORTE MAIN BOARD	MAIN BOARD SUPPORT	1									
3	12119403	TARJETA PRINCIPAL TP (FULL)	MAIN BOARD TP (FULL)	1							X		
4	12116823	TRANSFORMADOR 1N 50W 240V/12V	1N 50W 240V/12V TRANSFORMER	1							X		
5	12023477	SECCIONADOR 63A 4VIA 2POS UL	SECTION SWITCH 63A 4VIA 2POS UL	1							X		
6	12024075	CON.3RT1024-1AN20 230V 50H	CON.3RT1024-1AN20 230V 50H	1							X		
7	12024743	BORNE TIER 10 WPE-10103.O	TERMINAL TIER 10 WPE-10103.O	1									
9	12025180	REGLETA BORNAJE 2 PISOS	TERMINAL STRIP 2 PISOS	14									
10	12025158	BORNAS PORTA FUSIBLES	FUSE HOLDER TERMINALS	2									
11	12128263	SENSOR DE PRESION 100MBAR	100MBAR PRESSURE SENSOR	1									
12	12024660	PASA CABLES	CABLE PROTECTOR	20									
13	12023862	VENTILADOR 230V.50-60HZ	FAN 230V.50-60HZ	2							X		
14	12025058	BISAGRA AUTOSERVICIO	SELF-SERVICE HINGE	3									
15	12024998	CERRADURA 0185	LOCK 0185	3									
16	12023385	FILTRO REGULADOR DE AIRE	AIR FILTER REGULATOR	1							X		
S/Nº	12009811	REDUCCION RC1/4-3/8	REDUCTION RC1/4-3/8	2									
17	12120814	TARJETA AUXILIAR TP (KITS)	AUXILIAR BOARD TP (KITS)	2							X		
18	12024645	RESISTENCIA TANQUE	TANK RESISTOR	1									
19	12021479	REP VARIADOR LA-120 (KEB) PROG.	REP. INVERTER LA-120 (KEB) PROG.	1							X	July-16	
20	12023376	EV. SERIE 192 3/2	EV. SERIE 192 3/2	5							X		
21	12023482	LOTE EXTREMOS 6MM 3530071	END BLOCK 6MM 3530071	1									
22	12024969	BASE ACOPLABLE TUBO 4mm	BASE ACOPLABLE TUBO 4mm	5									
23	12000881	AUTOTR III 220/380V 15KVA	AUTOTR III 220/380V 15KVA	1							X		

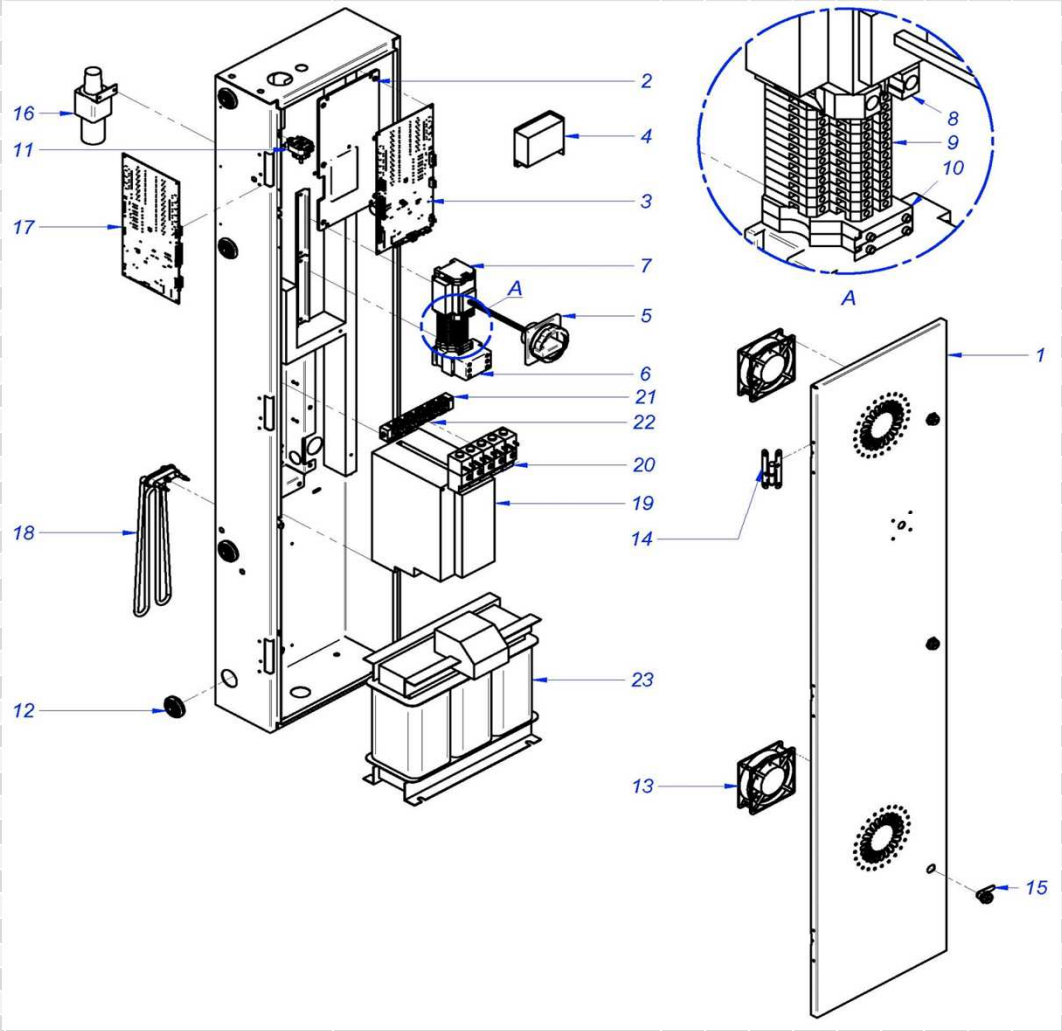

	VARIOS / VARIOUS	LÁMINA / DRAWING	

ITEM	REFERENCIA REFERENCE	DENOMINACIÓN	DENOMINATION	LS-125 T							RECOMMENDED	ELIMINADO ELIMINATED	INTRODUCIDO INTRODUCED
	12124211	INSTALACIÓN ELECT. L-120	ELEC. INSTALLATION L-120	1									
	12025207	CABLE MICRO DESEQUILIBRIO	UNBALANCE MICRO WIRE	1									
	12023230	CABLEADO MOTOR 120	ENGINE WIRING 120	1									
	12024960	CABLEADO PROGR. TECLADO 120	PROG. WIRING KEYBOARD 120	1									
	12095232	CABLE. PTC+PUENTE RECTIFIC.	PTC + WIRING BRIDGE-RECTIF.	1							X		
	12025199	CABLE REGLETA CONTACTOR	POWER STRIP - CONTACTOR WIRE	1									